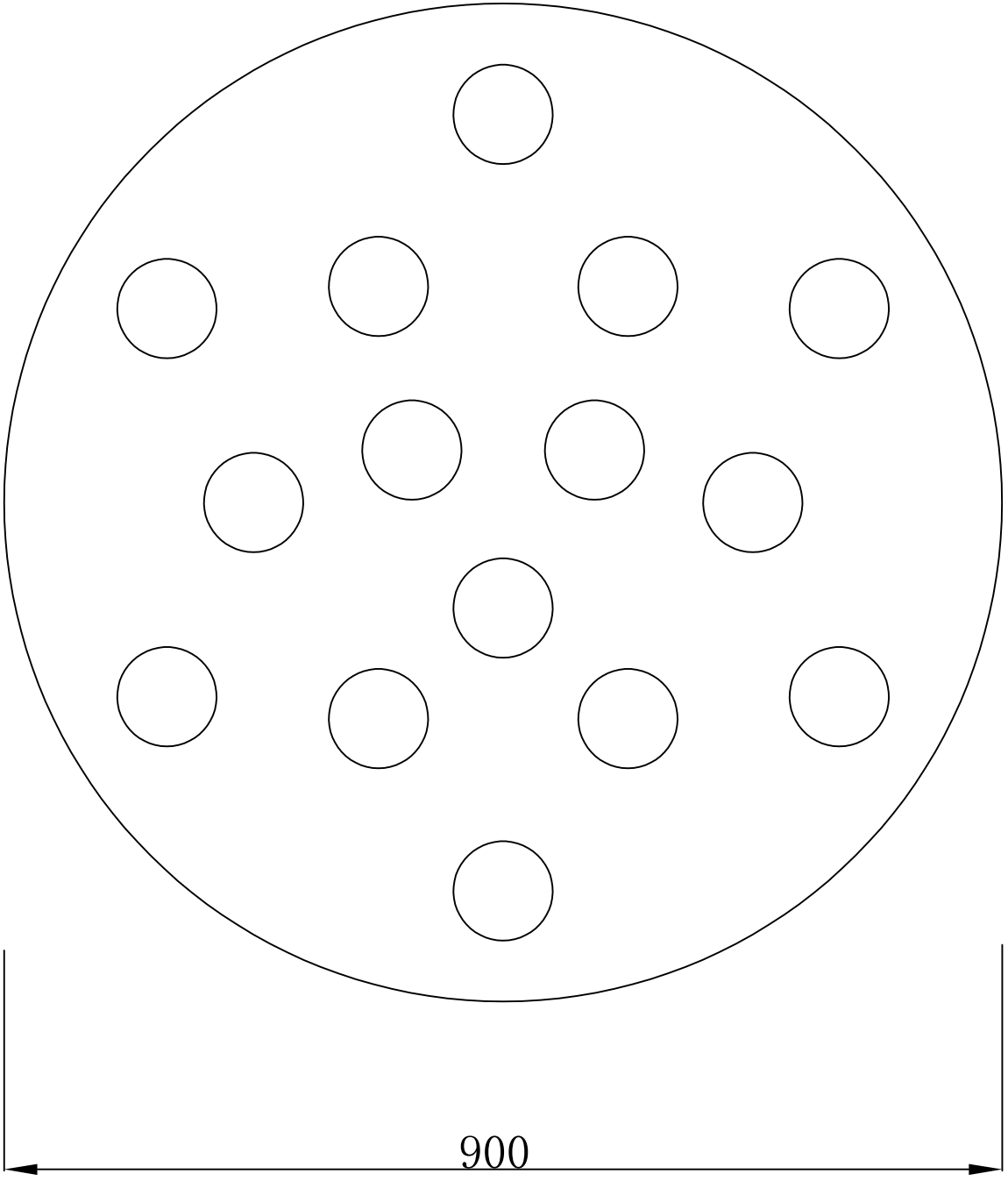
900

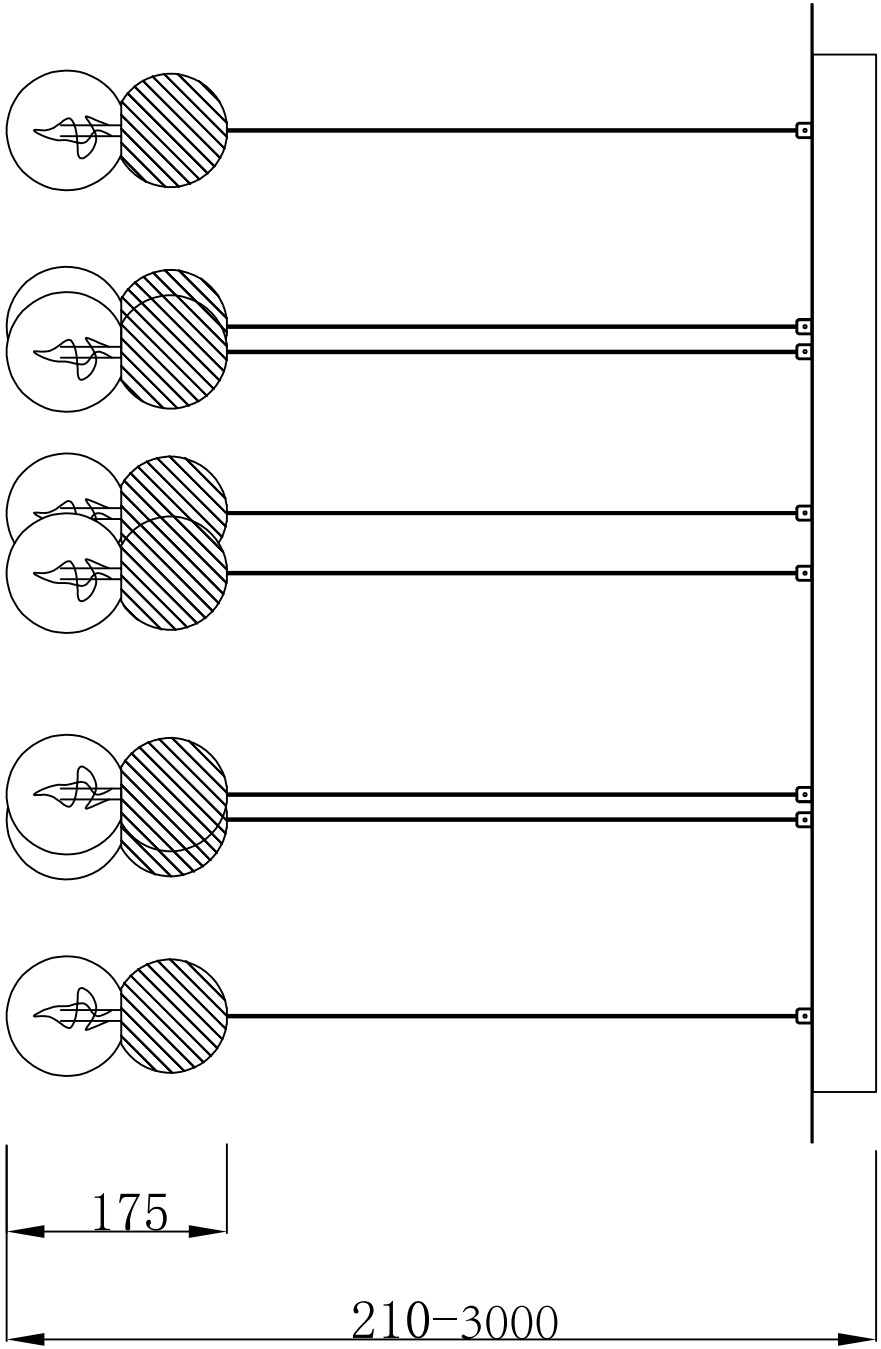
175
210-3000

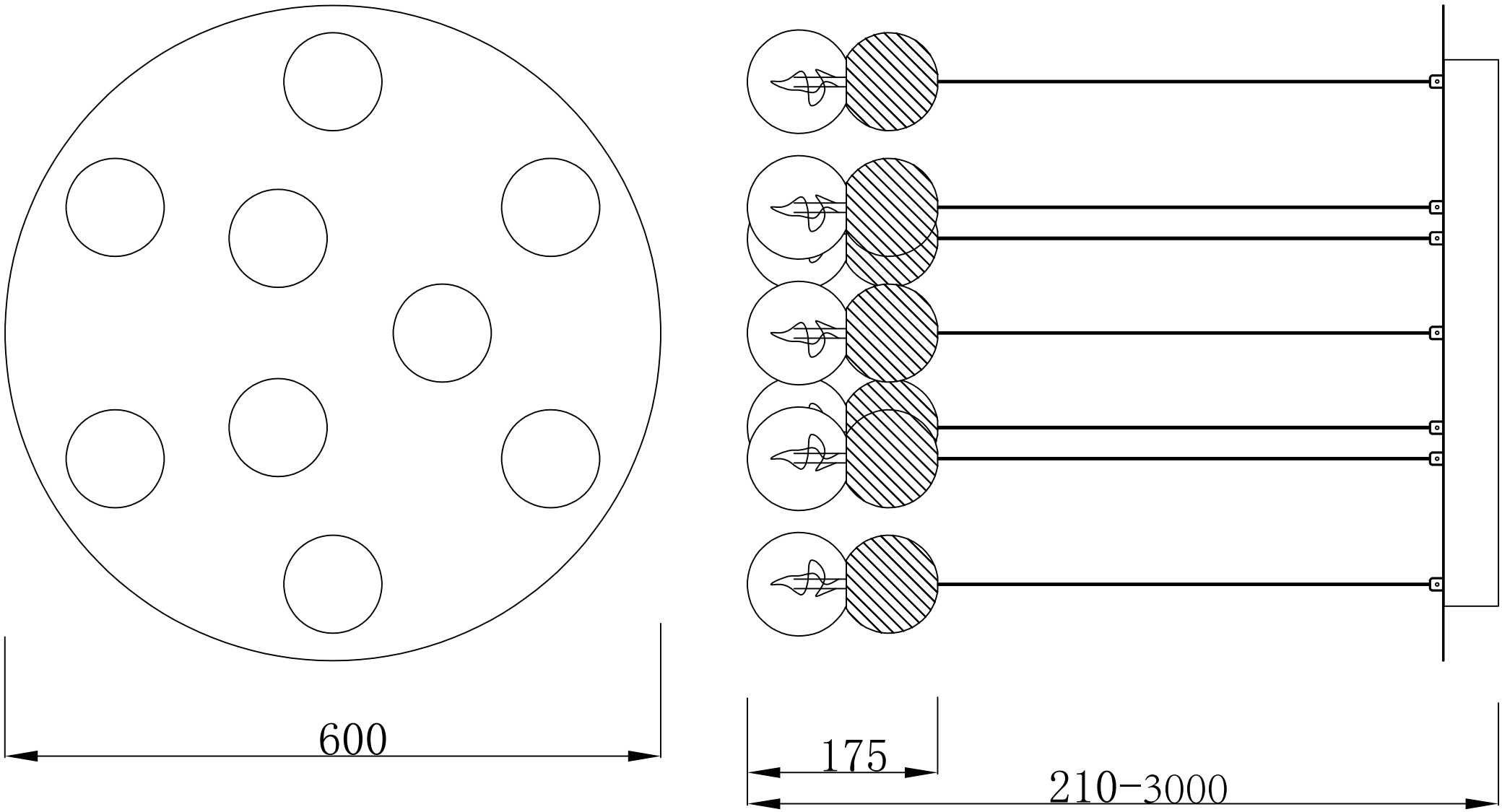
600
175
210-3000

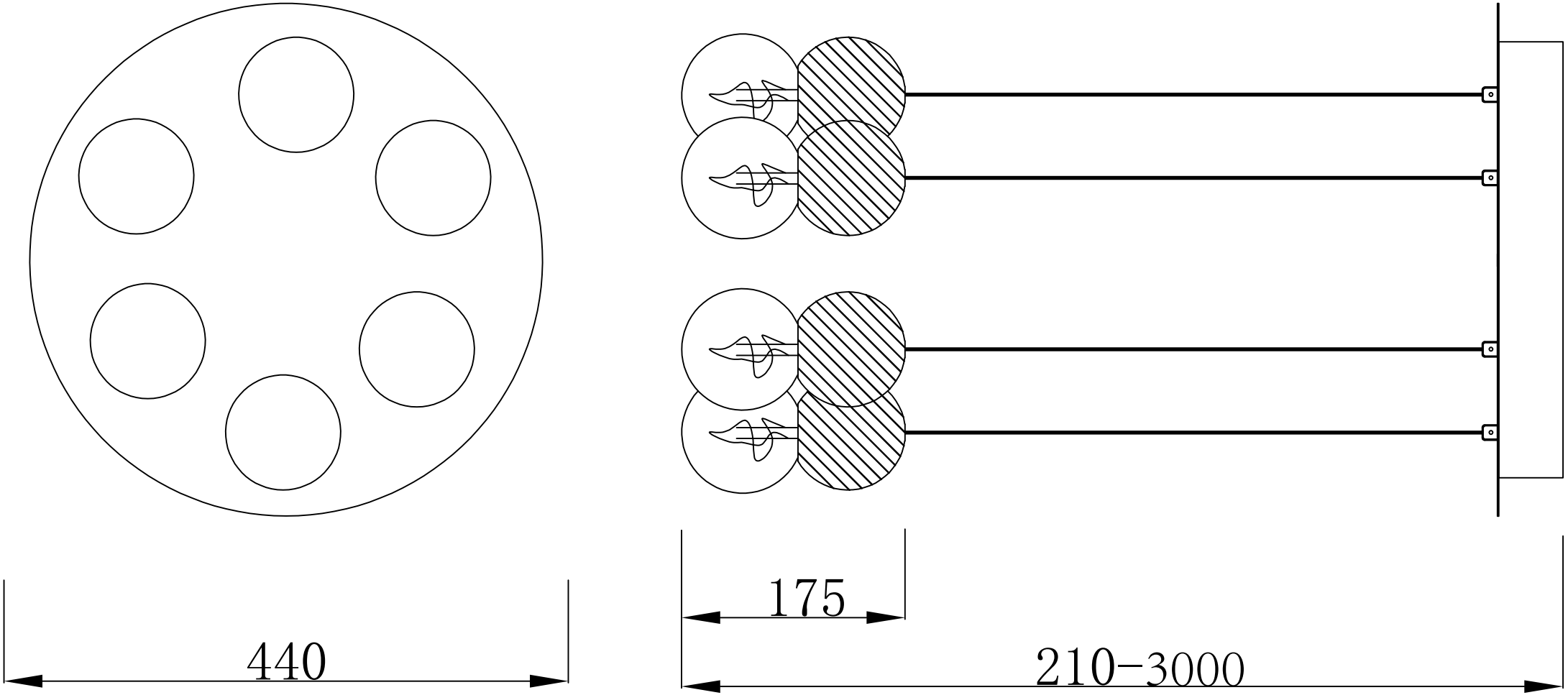
440
175
210-3000

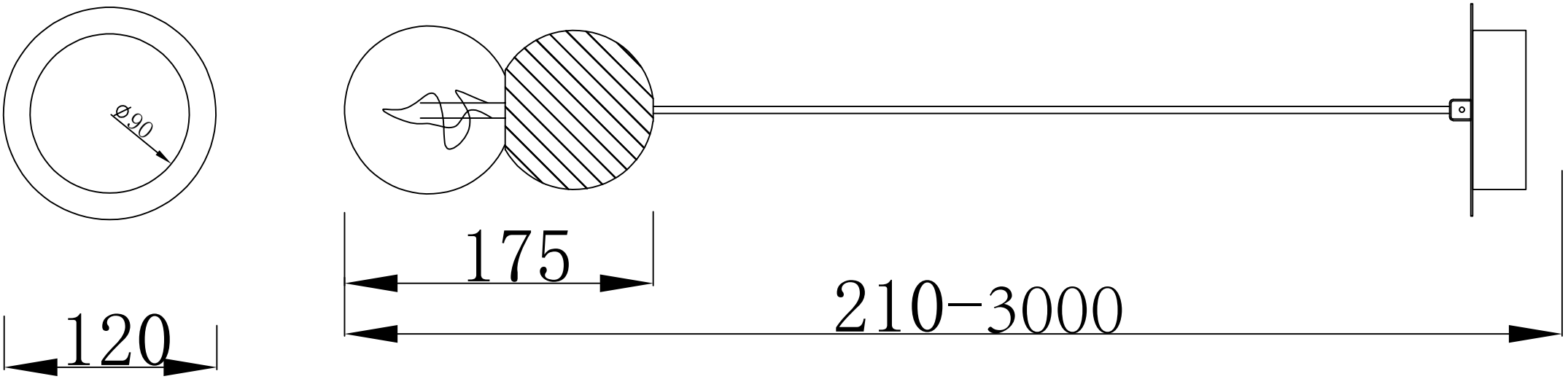
Ø90
175
210-3000
120

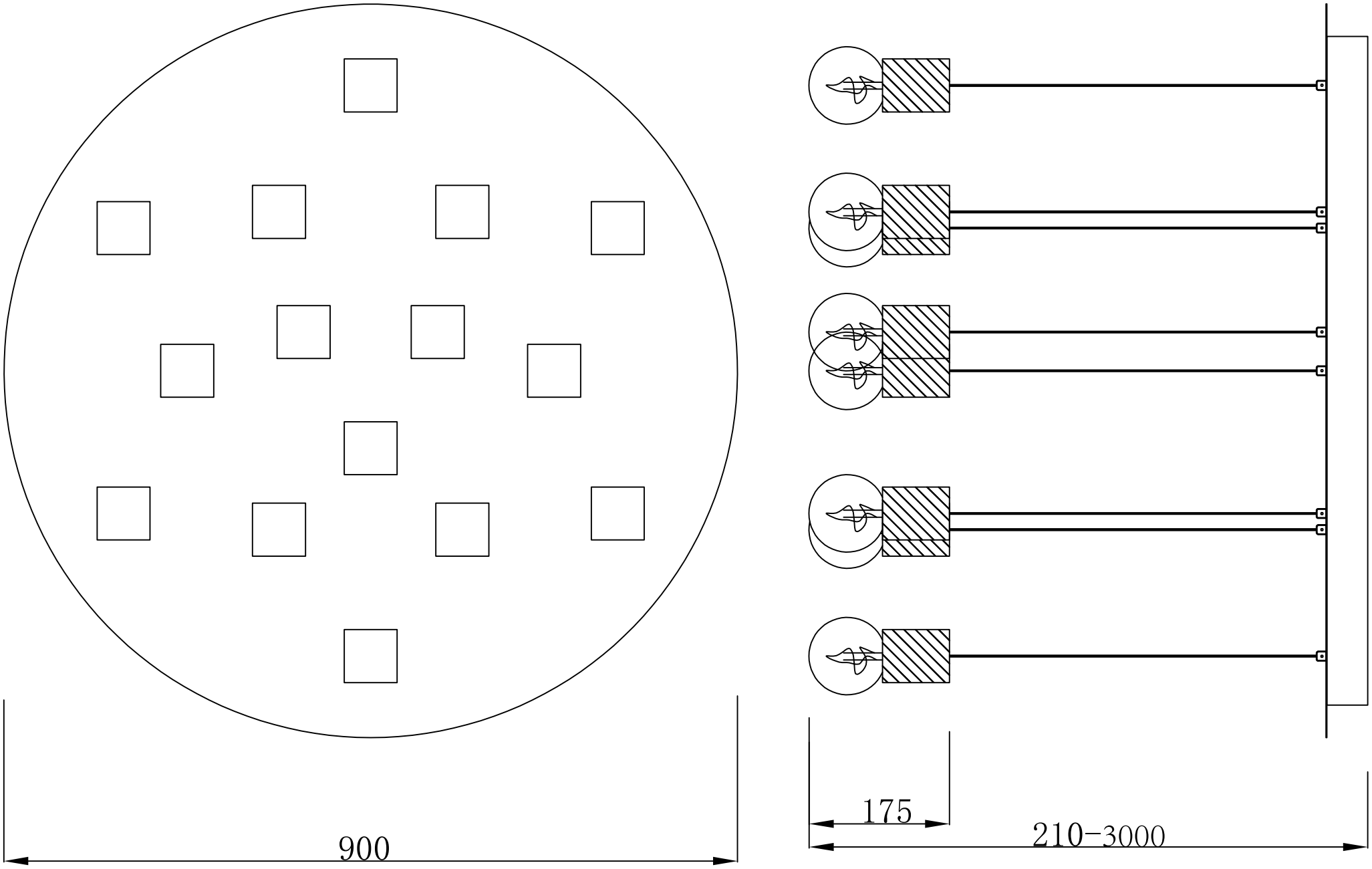
900
175
210-3000

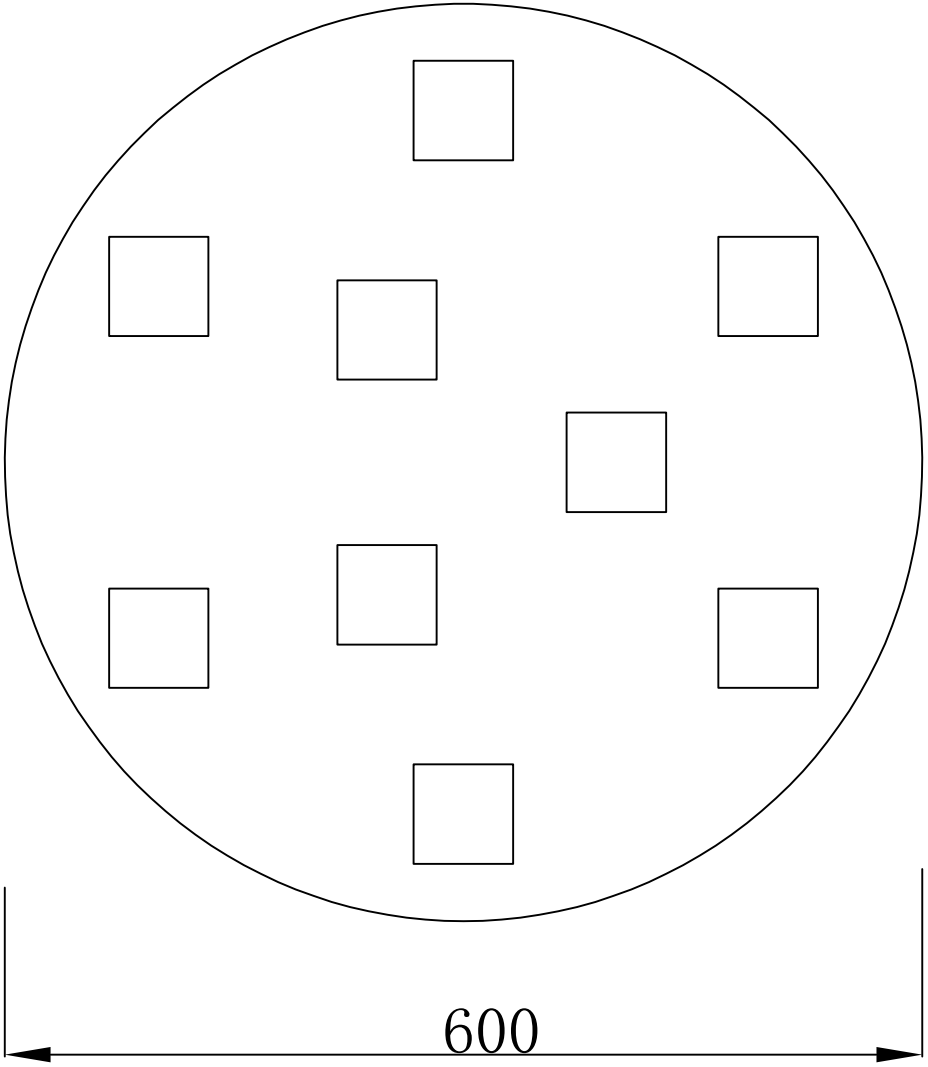
600

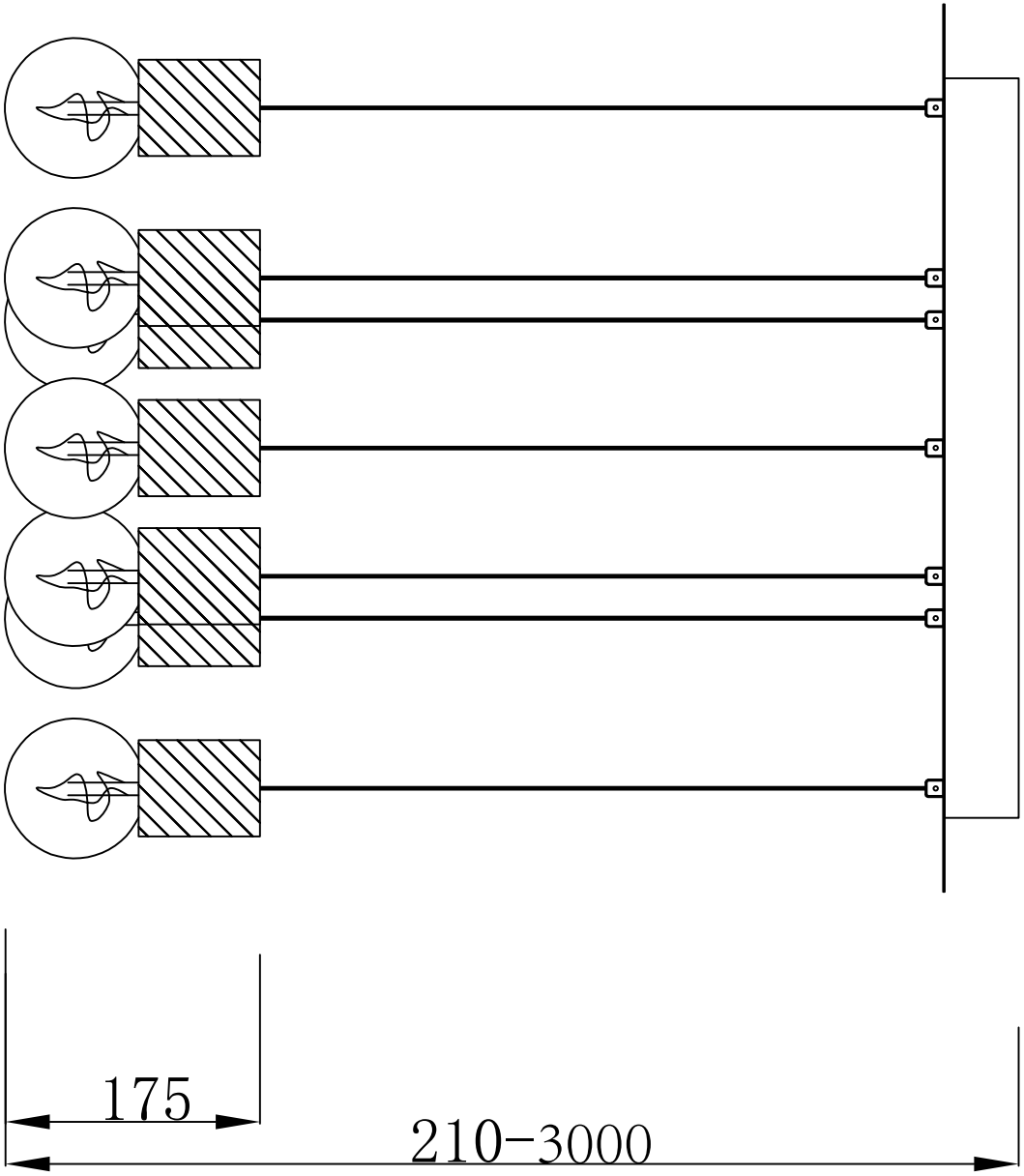
175
210-3000

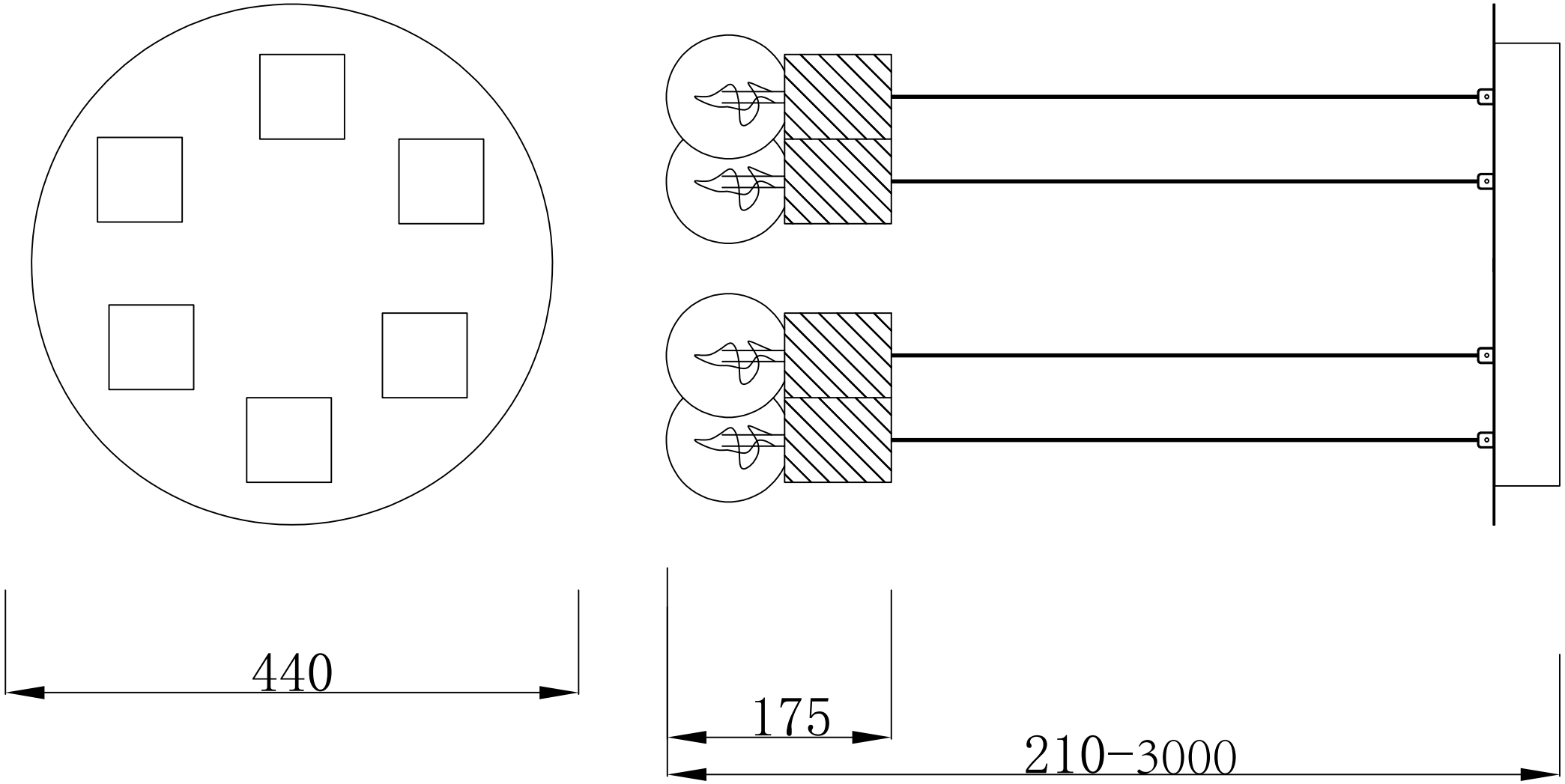
440
175
210-3000

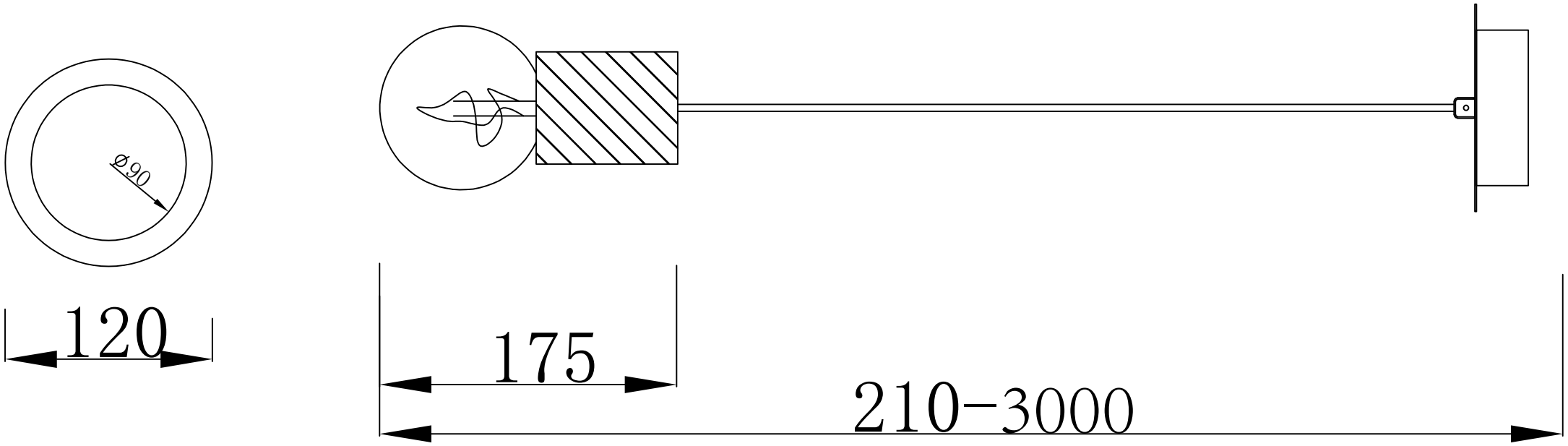
Ø90
120
175
210-3000