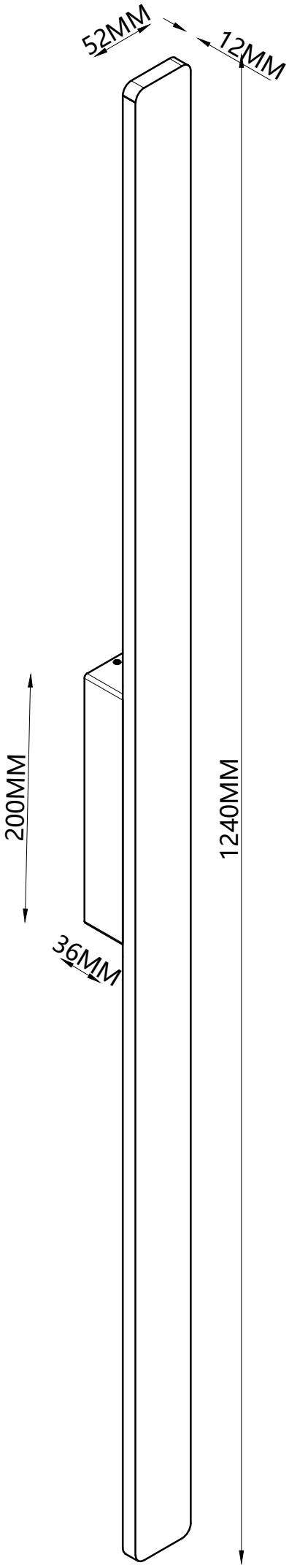
52MM
12MM
200MM
1240MM
36MM

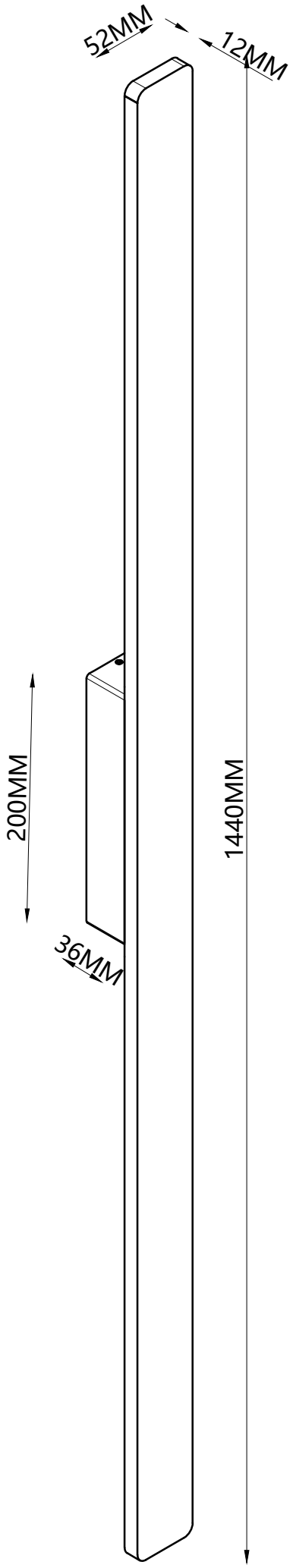
52MM
12MM
200MM
1440MM
36MM